FOXY, BLACK/ORANGE/GREY, 2021

obj. č: 010.21073

Technické specifikace

barva rámečku black/orange/grey	**vyráběné velikosti** S 380mm / M 420mm / L 470mm / XL 510mm
hmotnost 15,5 Kg	**rám** Foxy 29 6061 Alloy Stealth Evo, hydroformed tubing, Zero Suspension System, 150mm travel, Forward Geometry, one piece Monoblock upper link, Boost 12x148mm rear axle, 73mm BSA bottom bracket, dedicated 1x drivetrain design, telescopic seatpost internal routing, MAX capacity sealed bearings, ISCG 05
vidlice Fox 36 29 Float FIT GRIP EVOL Rhythm, 160mm, tapered steerer tube, Boost 15x110mm axle, offset 44mm. Settings: sweep adjust compression, low-speed rebound, air preload	**hlavové složení** Onoff Saturn tapered for 1-1/8 to 1-1/2 head tube, ACB sealed bearings, top 41x30.2x7x45x45, bottom 51.9x40x8x45x45
přehazovačka Sram SX Eagle, Type 3 roller bearing clutch, cage lock, long cage, 1x12s, X-actuation 1:1	**řazení** Sram Trigger SX Eagle, 12s, X-Actuation 1:1
brzdové páčky Sram G2 R, tool-free reach adjust	**kliky** Sram SX Eagle, Boost, DUB axle, Direct Mount chain ring, S/M size: 170mm, L/XL size: 175mm
středové složení Sram DUB BSA, sealed bearings, 73mm	**řidítka** Onoff Sulfur 1.0 double butted 6061 alloy, rise: 20mm, width: 780mm, 9 backsweep, 5º upsweep, 31.8mm barbore Onoff Twin, 1lock-on, 135mm
představec Onoff Sulfur FG 30mm 0, 6061 forged alloy, 31.8mm barbore	**sedlovka** Onoff Pija dropper internal, diameter 31.6mm, S size: 337x100mm, M size 387x125mm, L size: 425x150mm, XL size: 465x170mm
sedlo SDG BEL-AIR 3.0, LPU foam, steel rails	**náboj přední** Formula DC711, Boost 15x110mm, sealed bearings, IS 6 bolts
náboj zadní Formula MST148S-4SB, Boost 12x148mm, sealed bearings, IS 6 bolts	**řetěz** Sram SX Eagle, 12s, Powerlock
kazeta Sram PG-1210, 11-50T, 12s	**dráty** CN round stainless steel
ráfky MDK-EP1 29 TLR ASY, asymmetrical rim, 30mm internal width, tubeless ready, 32 spokes	**pláště** Maxxis Minion DHF 29x2.5 WT, tubeless ready, 3C MAXX TERRA compound, EXO+ protection, 120TPI, folding bead
obj.c. 010.21073	**tlumič** Fox Float DPS LV EVOL Performance, 205x62.5mm. Settings: rebound, 3-position compression adjustment (Open/Mid/Lock), air preload. Trunnion top mount, 22.2x10mm bottom bushings

přední brzda Sram G2 R, 4-piston caliper, Centerline 200mm IS 6 bolts one-piece rotor, steel-backed organic pads	**zadní brzda** Sram G2 R, 4-piston caliper, Centerline 180mm IS 6 bolts one-piece rotor, steel-backed organic pads
omotávka Maxxis Aggressor 29x2.3, tubeless ready, dual compound, Exo protection, 60TPI, folding bead	**nastavení tlumiče** Light compression, extralight rebound, air volume spacer 0.6
převodník 32T, steel, X-Sync 2	**patka k přehazovačce** Mondraker M068

Geometrie

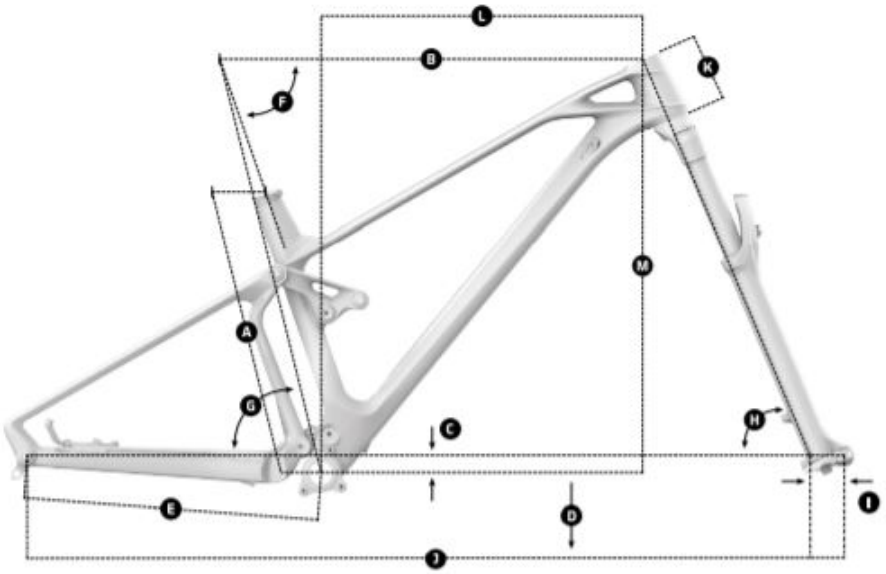

GEOMETRY

Size		S	M	L	XL
A	Seat Tube Length	380 mm	420 mm	470 mm	510 mm
B	Top Tube Length	606 mm	629 mm	654 mm	678 mm
C	Bottom Bracket Drop	-21 mm	-21 mm	-21 mm	-21 mm
D	Bottom Bracket Height	352 mm	352 mm	352 mm	352 mm
E	Chainstay Legth	435 mm	435 mm	435 mm	435 mm
F	Seat Tube Angle, Actual	70.5°	70.5°	70.5°	70.5°
G	Seat Tube Angle, Effective	75.5°	75.5°	75.5°	75.5°
H	Head Tube Angle	66°	66°	66°	66°
I	Fork Offset	44 mm	44 mm	44 mm	44 mm
J	Wheelbase	1187 mm	1210 mm	1236 mm	1262 mm
K	Head Tube Length	90 mm	100 mm	115 mm	130 mm
L	Reach	450 mm	470 mm	490 mm	510 mm
M	Stack	605 mm	614 mm	628 mm	642 mm