F-PODIUM CARBON R, CARBON/YELLOW/GREEN, 2021

obj. č: 010.21041

Technické specifikace

barva rámečku
carbon/yellow/green

vyráběné velikosti
S 390mm / M 420mm / L 470mm / XL 510mm

hmotnost
10,8 Kg

rám
F-Podium 29 Stealth Air Full Carbon, XCO Optimized Zero Suspension System, 100mm, XC Forward Geometry, Carbon Monoblock upper link, BSA bottom bracket, tapered head tube, HHG internal cable routing, dedicated 1X drivetrain design, Boost 12x148mm rear axle, shock mudguard, postmount rear brake mount.

vidlice
Fox 32 29 Float FIT4 EVOL Step Cast Factory Kashima, 100mm, tapered steerer tube,15x110mm Boost axle, remote lockout, offset 44mm. Settings: lockout, compression micro-adjustment at low-speed, rebound, air preload

hlavové složení
Acros AZX-239 R1 Block Lock, ZS44/28.6 top, ZS56/40 bottom

přehazovačka
Sram X01 Eagle, Type 3 roller bearing clutch, cage lock, 1x12s, X-Actuation 1:1

řazení
Sram Trigger GX Eagle, 12s, X-Actuation 1:1

brzdové páčky
Sram Level TL, Direct Link actuation, tooled reach adjust, lever pivot bushings

kliky
Sram X1 Carbon Eagle, Boost, DUB axle, Direct mount chain ring, S size: 170mm, M/L/XL size: 175mm

středové složení
Sram DUB BSA, sealed bearings, 73mm

řidítka
Onoff Helium Carbon 0.2, rise: 4.8mm, width: 760mm, 9 backsweep, 0 upsweep, 31.8mm barbore Onoff Desert, 1lock-on, 135mm, sizes: S/M L/XL

představec
MDK, 6061 T6 Alloy, 31.8mm barbore, rise: +/-5, length: sizes S/M: 50mm, size L: 60mm, size XL: 70mm

sedlovka
Onoff Helium Carbon 0-R, diameter 31.6mm, length 400mm

sedlo
Fizik Antares R7

náboj přední
DT 370, Boost 15x110mm, IS 6 bolts

náboj zadní
DT 370, Boost 12x148mm, 3 Pawl system, IS 6 bolts, MS freehub

řetěz
Sram GX Eagle, 12s, Powerlock

kazeta
Sram XG-1275, 10-50T, 12s

dráty
DT Champion, straightpull

ráfky
DT Swiss XRC1750 Carbon Spline 29, 30mm internal width, hookless, tubeless ready, 28 spokes

pláště
Maxxis Rekon Race 29x2.35, EXO protection, tubeless ready, 120TPI, folding bead

obj.c. 010.21041	**tlumič** Fox Float DPS SV EVOL Factory Kashima, 185x47,5mm. Settings: 2 position remote compression (open/lock), low-speed rebound, air preload. Trunnion top mount, 22.2x10mm bottom bushings
přední brzda Sram Level TL, 2 piece caliper, Centerline 160mm IS 6 bolts one-piece rotor, steel-backed organic pad	**zadní brzda** Sram Level TL, 2 piece caliper, Centerline 160mm IS 6 bolts one-piece rotor, steel-backed organic pad
omotávka Maxxis Rekon Race 29x2.35, EXO protection, tubeless ready, 120TPI, folding bead	**nastavení tlumiče** Firm compression, light rebound, air volume spacer 0.2
převodník 34T, CNC-machined alloy, X-SYNC 2	**patka k přehazovačce** Sram UDH

Geometrie

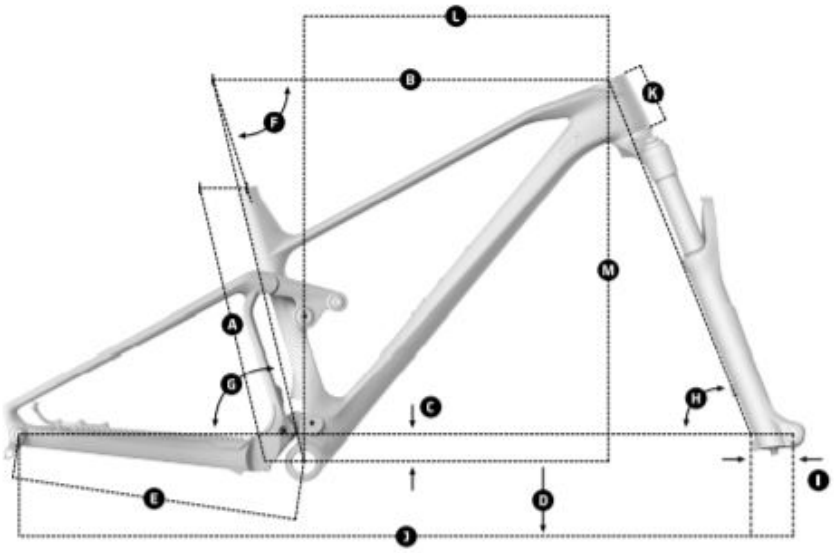

GEOMETRY

Size	S	M	L	XL
A Seat Tube Length	390 mm	420 mm	470 mm	510 mm
B Top Tube Length	580 mm	600mm	625 mm	650 mm
C Bottom Bracket Drop	-40 mm	-40 mm	-40 mm	-40 mm
D Bottom Bracket Height	325 mm	325 mm	325 mm	325 mm
E Chainstay Legth	432 mm	432 mm	432 mm	432 mm
F Seat Tube Angle, Actual	72°	72°	72°	72°
G Seat Tube Angle, Effective	76.5°	76.5°	76.5°	76.5°
H Head Tube Angle	68°	68°	68°	68°
I Fork Offset	44 mm	44 mm	44 mm	44 mm
J Wheelbase	1132 mm	1153 mm	1177 mm	1203 mm
K Head Tube Length	85 mm	90 mm	100 mm	115 mm
L Reach	440 mm	460 mm	480 mm	500 mm
M Stack	570 mm	575 mm	584 mm	598 mm